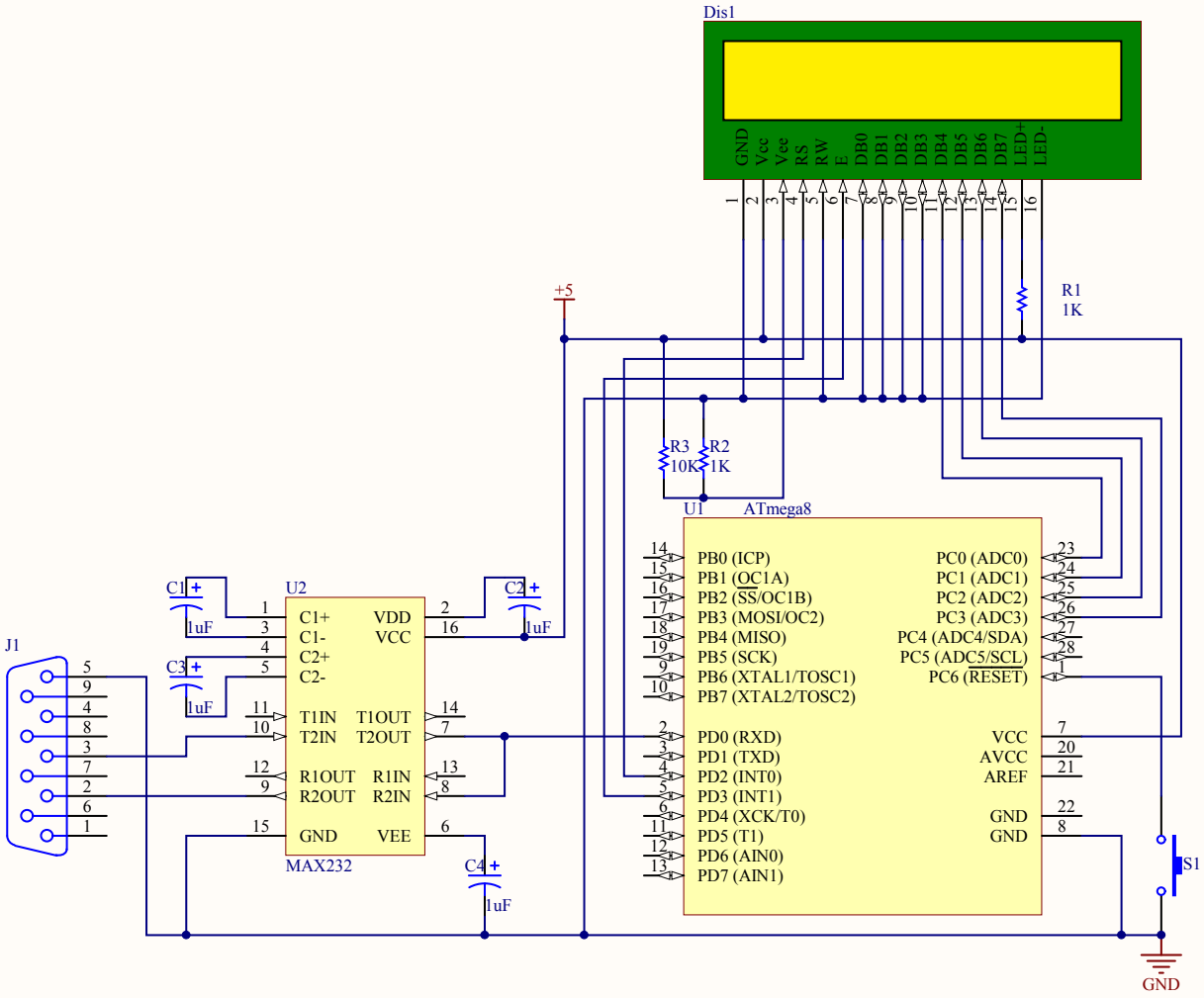
Dis1
GND
Vcc
Vee
RS
RW
E
DB0
DB1
DB2
DB3
DB4
DB5
DB6
DB7
LED+
LED-
R1
1K
+5
R3
10K
R2
1K
U1
ATmega8
PB0 (ICP)
PB1 (OC1A)
PB2 (SS/OC1B)
PB3 (MOSI/OC2)
PB4 (MISO)
PB5 (SCK)
PB6 (XTAL1/TOSC1)
PB7 (XTAL2/TOSC2)
PD0 (RXD)
PD1 (TXD)
PD2 (INT0)
PD3 (INT1)
PD4 (XCK/T0)
PD5 (T1)
PD6 (AIN0)
PD7 (AIN1)
PC0 (ADC0)
PC1 (ADC1)
PC2 (ADC2)
PC3 (ADC3)
PC4 (ADC4/SDA)
PC5 (ADC5/SCL)
PC6 (RESET)
VCC
AVCC
AREF
GND
GND
S1
GND
C1
1uF
C2
1uF
C3
1uF
C4
1uF
U2
C1+
C1-
C2+
C2-
VDD
VCC
T1IN
T2IN
T1OUT
T2OUT
R1OUT
R2OUT
R1IN
R2IN
GND
VEE
MAX232
J1