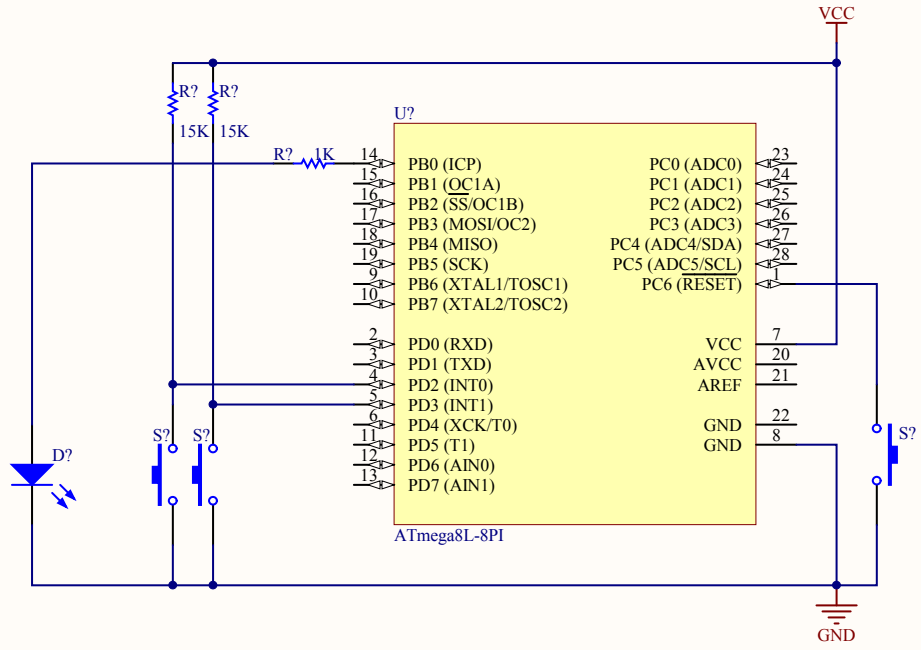
VCC
R?
15K
R?
15K
R?
1K
U?
PB0 (ICP)
PB1 (OC1A)
PB2 (SS/OC1B)
PB3 (MOSI/OC2)
PB4 (MISO)
PB5 (SCK)
PB6 (XTAL1/TOSC1)
PB7 (XTAL2/TOSC2)
PD0 (RXD)
PD1 (TXD)
PD2 (INT0)
PD3 (INT1)
PD4 (XCK/T0)
PD5 (T1)
PD6 (AIN0)
PD7 (AIN1)
PC0 (ADC0)
PC1 (ADC1)
PC2 (ADC2)
PC3 (ADC3)
PC4 (ADC4/SDA)
PC5 (ADC5/SCL)
PC6 (RESET)
VCC
AVCC
AREF
GND
GND
ATmega8L-8PI
D?
S?
S?
S?
GND